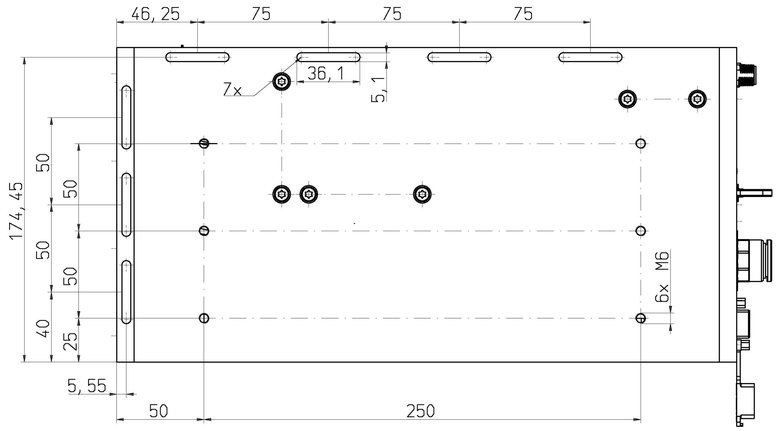
46, 25
75
75
75
7x
36, 1
5, 1
174, 45
50
50
50
50
40
25
6x M6
5, 55
50
250

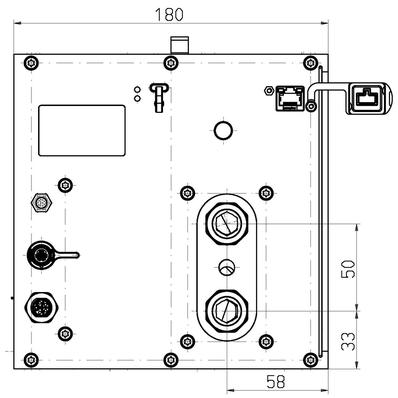
180
50
33
58

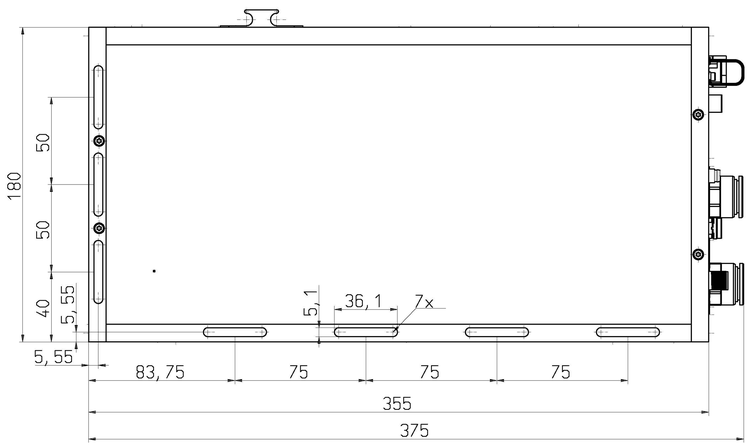
180
50
50
40
5, 55
5, 55
5, 1
36, 1
7x
83, 75
75
75
75
355
375

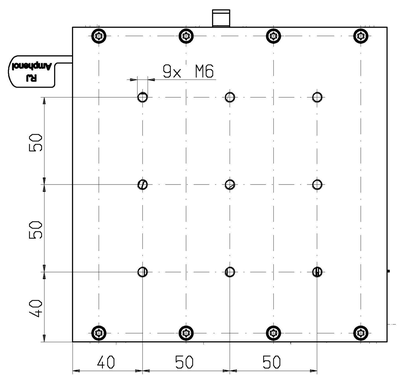
9x M6
50
50
40
40
50
50

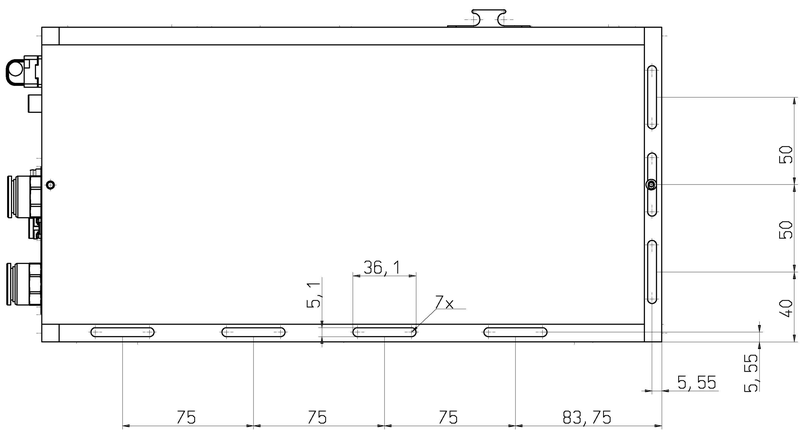
50
50
40
5, 1
36, 1
7x
5, 55
5, 55
75
75
75
83, 75

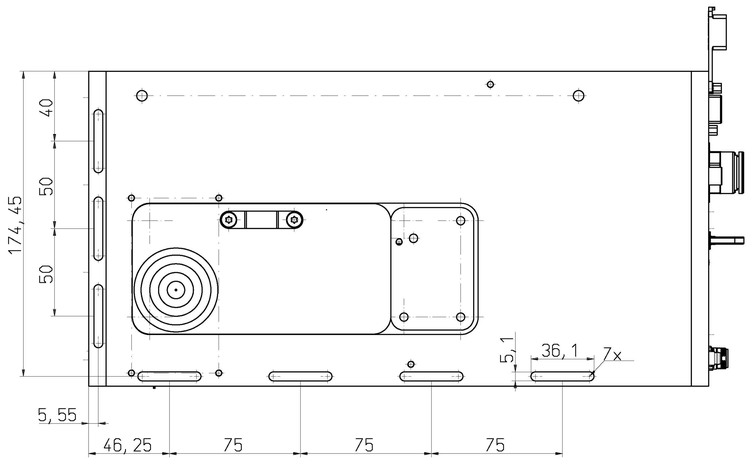
40
50
50
174, 45
5, 1
36, 1
7x
5, 55
46, 25
75
75
75